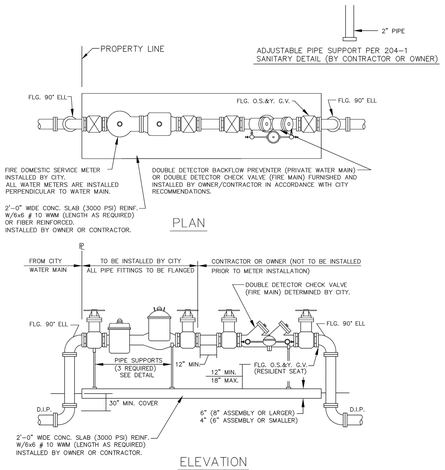


## FIRE ONLY METER AND BACKFLOW DEVICE DETAILS

NOTES

1. THE BACKFLOW PREVENTOR FOR THE BY-PASS SHALL BE DDCV OR RPZ.
2. PLEASE NOTE THAT WATER METERS 3" AND LARGER ARE SUBJECT TO AN APPROXIMATE ORDER LEAD TIME OF 60 TO 75 DAYS AFTER FULL PAYMENT. PLEASE CONTACT CUSTOMER SERVICE AT 954-786-4637 TO ARRANGE FOR METER PROCUREMENT AND INSTALLATION.
3. USE MEGALUGS AT ALL PIPE JOINTS
4. PLEASE SEE METER INSTALL DIMENSION LIST ON STANDARD NO. 106-4

ENGINEERING STANDARDS 2022

| REVISIONS BY | DATE | ENGINEERING DIVISION CITY OF POMPANO BEACH | FIRE ONLY METER AND BACKFLOW DEVICE |
|---|---|---|---|
| S.S. | 05-2011 | | DATE: MAY 2022 |
| S.S. | 11-2012 | | DWG. NO. |
| S.S. | 12-2013 | SCALE: N.T.S. | 106-3 |
| S.S. | 11-2016 | | |

| FIRE METERS - OS & Y VALVES, GASKETS & METER | | | | | |
|---|---|---|---|---|---|
| (NEPTUNE MACH 10 Ultrasonic Meter) | | | | | 2" MIN. TRAVEL |
| SIZE | VALVES (2) | GASKETS (4) | METER w/ Strainer | TOTAL LENGTH | |
| 3" w/ 4" X 3" Reducer ** | 16" | 1/2" | 30" ** | 46 1/2" | |
| 4" | 18" | 1/2" | 27 1/2" | 46" | |
| 6" | 21" | 1/2" | 33" | 54 1/2" | |
| 8" | 23" | 1/2" | 30" | 53 1/2" | |
| 10" | 26" | 1/2" | 41" | 67 1/2" | |
| **FIRE &/or Domestic Water SERVICE METERS - TEES, OS & Y VALVES, GASKETS & METERS** | | | | | |
| (NEPTUNE MACH 10 Ultrasonic Meter) | | | | Meter w/ | TOTAL |
| SIZE | TEES (2) | VALVES (2) | GASKETS (6) | Strainer | LENGTH |
| 3" w/ 4" X 3" Reducer ** | 3" X 3" - 22" | 16" | 3/4" | 30" ** | 68 3/4" |
| 4" | 4" X 3" - 26" | 18" | 3/4" | 27 1/2" | 72 1/4" |
| 6" | 6" X 4" - 32" | 21" | 3/4" | 33" | 86 3/4" |
| 8" | 8" X 4" - 36" | 23" | 3/4" | 30" | 89 3/4" |
| 10" | 10" X 6" - 44" | 26" | 3/4" | 41" | 111 3/4" |

*All fittings, valves and meters are flanged & all dimensions are from face of flange to face of flange.

NOTE:
PLEASE NOTE THAT WATER METERS 3" AND LARGER ARE SUBJECT TO AN APPROXIMATE ORDER LEAD TIME OF 60 TO 75 BUSINESS DAYS AFTER FULL PAYMENT. PLEASE CONTACT CUSTOMER SERVICE AT 954-786-4637 TO ARRANGE FOR METER PROCUREMENT AND INSTALLATION. LARGE METERS MUST BE AT MINIMUM ORDERED PRIOR TO INITIAL INSPECTIONS.

ENGINEERING STANDARDS 2022

| REVISIONS BY | DATE | ENGINEERING DIVISION CITY OF POMPANO BEACH | METER INSTALL DIMENSION LIST |
|---|---|---|---|
| T.W. | 02-2008 | | DATE: JAN. 2022 |
| S.S. | 11-2016 | | DWG. NO. |
| A.S. | 01-2022 | SCALE: N.T.S. | 106-4 |

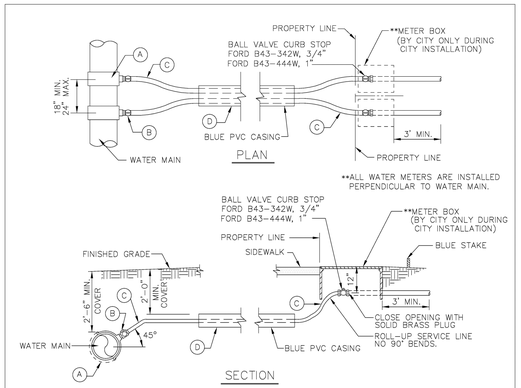


SINGLE SERVICE

- (A) 1" TAPPING SADDLE CC THREAD FORD
- (B) 1" CORPORATION STOP FORD TYPE F1000-4 NL THREADS
- (C) 1" POLYETHYLENE SOLID BLUE CTS SDR 18 (200 PSI)
- (D) 1 1/2" SCH. 40 FOR 1" SERVICE 2 1/2" SCH. 40 FOR 2" SERVICE PAINTED BLUE

DOUBLE SERVICE

- (A) 1" TAPPING SADDLE (2) FORD FC-202 OR EQUAL.
- (B) 1" CORPORATION STOP (2) FORD TYPE F1000
- (C) 1" POLYETHYLENE SOLID BLUE C.T.S. (2)
- (D) 2 1/2" SCH. 40 FOR 1" SERVICE 6" SCH. 40 FOR 2" SERVICE PAINTED BLUE

## TYPICAL 3/4" AND 1" WATER SERVICE

ENGINEERING STANDARDS 2022

| REVISIONS BY | DATE | ENGINEERING DIVISION CITY OF POMPANO BEACH | TYPICAL 1" WATER SERVICE |
|---|---|---|---|
| T.W. | 11-2007 | | DATE: MAY 2022 |
| S.S. | 05-2012 | | DWG. NO. |
| S.S. | 11-2015 | SCALE: N.T.S. | 107-1 |
| A.S. | 08-2021 | | |

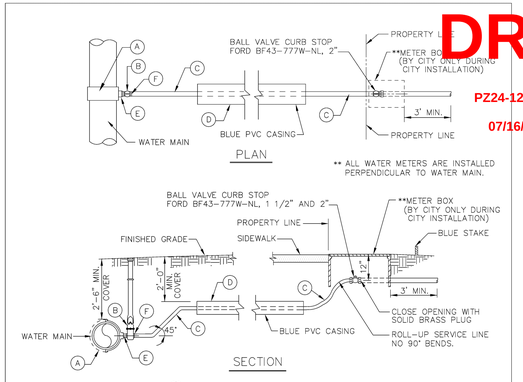


- (A) 2" TAPPING SADDLE IRON PIPE THREADED FORD FC-202 OR EQUAL.
- (B) 2" RESILIENT SEATED GATE VALVE CLOW F61-03 MUELLER A-23-60-B 2" OPERATING NUT BOXED TO GRADE - C.I. BOX
- (C) 2" POLYETHYLENE BLUE
- (D) 2 1/2" SCH. 40
- (E) 2" X 3" BRASS NIPPLE
- (F) 2" MIP COUPLING C-84-77 - PACK JOINT - CTS

## TYPICAL 1 1/2" AND 2" WATER SERVICE

ENGINEERING STANDARDS 2022

| REVISIONS BY | DATE | ENGINEERING DIVISION CITY OF POMPANO BEACH | TYPICAL 2" WATER SERVICE |
|---|---|---|---|
| S.S. | 05-2011 | | DATE: APRIL 2022 |
| S.S. | 05-2012 | | DWG. NO. |
| S.S. | 11-2018 | SCALE: N.T.S. | 107-2 |
| A.S. | 08-2021 | | |

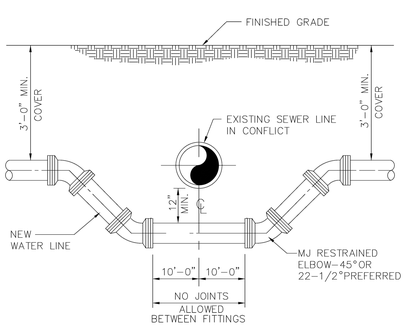


NOTES

WHERE CONDITIONS PERMIT, PIPE DEFLECTION MAY BE USED INSTEAD OF BENDS TO OBTAIN THE MINIMUM CLEARANCE. FACTORY OFFSETS MAY BE USED.

## TYPICAL CONFLICT DETAIL

USE MEGALUGS AT ALL PIPE JOINTS

ALL D.I.P. TO BE PAINTED BLUE ON TOP HALF OF PIPE.

ENGINEERING STANDARDS 2022

| REVISIONS BY | DATE | ENGINEERING DIVISION CITY OF POMPANO BEACH | TYPICAL CONFLICT (WATER) |
|---|---|---|---|
| S.S. | 04-2005 | | DATE: MAY 2022 |
| S.S. | 01-2012 | | DWG. NO. |
| | | SCALE: N.T.S. | 108-1 |

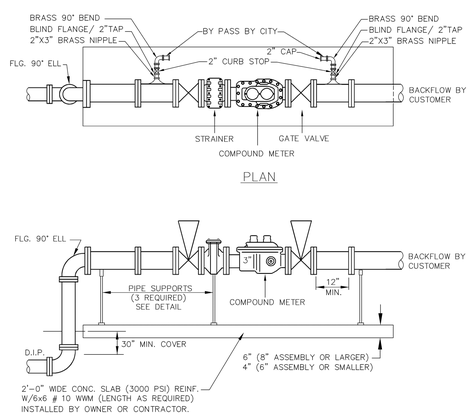


## DOMESTIC SERVICE ONLY

PLEASE SEE METER INSTALL DIMENSION LIST ON STANDARD NO. 106-4

USE MEGALUGS AT ALL PIPE JOINTS

ENGINEERING STANDARDS 2022

| REVISIONS BY | DATE | ENGINEERING DIVISION CITY OF POMPANO BEACH | DOMESTIC SERVICE ONLY |
|---|---|---|---|
| TCW | 04-08 | | DATE: APRIL 2022 |
| S.S. | 01-2012 | | DWG. NO. |
| S.S. | 11-2012 | SCALE: N.T.S. | 112-1 |

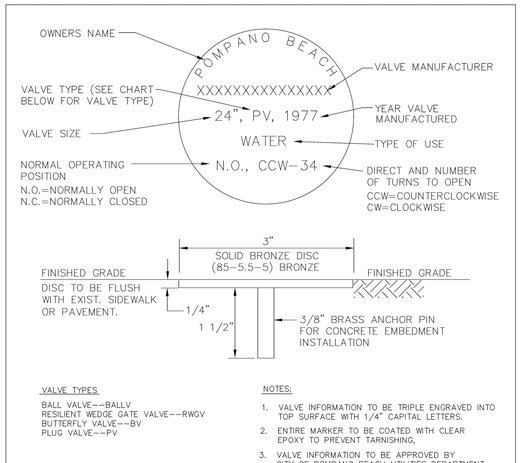


VALVE TYPES

BALL VALVE--BALLV
RESILIENT WEDGE GATE VALVE--RWGV
BUTTERFLY VALVE--BV
PLUG VALVE--PV

NOTES:

1. VALVE INFORMATION TO BE TRIPLE ENGRAVED INTO TOP SURFACE WITH 1/4" CAPITAL LETTERS.
2. ENTIRE MARKER TO BE COATED WITH CLEAR EPOXY TO PREVENT TARNISHING.
3. VALVE INFORMATION TO BE APPROVED BY CITY OF POMPANO BEACH UTILITIES DEPARTMENT.
4. MARKERS SHALL BE MANUFACTURED BY RG WRENCH, OR APPROVED EQUAL

## UNDERGROUND VALVE IDENTIFICATION MARKER

ENGINEERING STANDARDS 2022

| REVISIONS BY | DATE | ENGINEERING DIVISION CITY OF POMPANO BEACH | UNDERGROUND VALVE IDENTIFICATION MARKER |
|---|---|---|---|
| S.S. | JUNE 2005 | | DATE: FEB. 2022 |
| T.W. | 11-2007 | | DWG. NO. |
| T.W. | 02-2008 | SCALE: N.T.S. | 115-1 |
| S.S. | 1-24-12 | | |

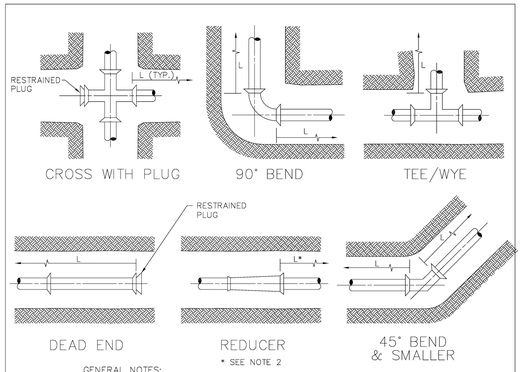


GENERAL NOTES:

1. VALUES IN TABLE ARE BASED ON 3' OF COVER, 100 PSI INTERNAL PRESSURE, FOR FORCE MAINS, 150 PSI REUSE WATER LINES, ANSI/AWWA C605 & C150/A21.50 LAYING CONDITION 3, ASTM D2487 SAND-SILT SP SOIL TYPE, AND SAFETY FACTOR OF 2.0. RESTRAINED LENGTHS WERE COMPUTED PER DIPRA "THRUST RESTRAINT DESIGN FOR DUCTILE IRON PIPE" AND "PVC PIPE THRUST RESTRAINT DESIGN HANDBOOK," EBAA IRON, INC.
2. CONFIRM THE EXACT LENGTH OF RESTRAINING REQUIRED FOR REDUCERS, PIPE ENCASED IN POLYETHYLENE AND ENCROACHING RESTRAINED LENGTHS WITH THE DESIGN ENGINEER.
3. THE CONTRACTOR IS RESPONSIBLE FOR PROPER INSTALLATION OF THE RESTRAINED JOINTS TO PREVENT MOVEMENT OF THE PIPE & FITTINGS.
4. IN THE EVENT OF A CONFLICT BETWEEN RESTRAINED LENGTHS SHOWN ON THE TABLE AND RESTRAINED LENGTHS SHOWN ON THE DRAWINGS, THE LONGEST RESTRAINED LENGTH SHALL BE USED.

## RESTRAINED JOINT INFORMATION

ENGINEERING STANDARDS 2022

| REVISIONS BY | DATE | ENGINEERING DIVISION CITY OF POMPANO BEACH | RESTRAINED JOINT INFORMATION |
|---|---|---|---|
| | | | DATE: MAY 2022 |
| | | | DWG. NO. |
| | | SCALE: N.T.S. | 118-1 |

DRC
PZ24-12000023
07/16/2025

Lou Campanile
Digitally signed by Lou Campanile
DN: c=US, o=CAMPANILE & ASSOCIATES, INC., ou=Lou Campanile, cn=CN=Lou Campanile, E=lou@camplandsurveyors.com
Date: 2025.05.14 08:46:08-04'00'

This item has been digitally signed and sealed by Lou Campanile, Jr. P.E., P.L.S., on the date and time shown in his digital signature.

Printed copies of this document are not considered signed and sealed and the digital signature must be verified on any electronic copies.

REGISTERED LOU CAMPANILE, JR. STATE OF FLORIDA PROFESSIONAL SURVEYOR & MAPPER 4338


CAMPANILE & ASSOCIATES, INC.
ENGINEERS PLANNERS SURVEYORS
6420 MAHI DRIVE
CORAL GABLES, FLORIDA 33158-1841
TEL: (305) 971-1988
LB 1678


5/14/25
Lou Campanile, Jr.
Professional Engineer No. 36762
Professional Surveyor and Mapper No. 4338
State of Florida

for RJS ARCHITECTS, INC.

# ELIAS APARTMENT BUILDING
216 SE 23 AVENUE
POMPANO BEACH, FLORIDA 33062-5304

## POMPANO BEACH WATER DETAILS

PROJECT NO. 5391
DATE 10/9/24
REVISIONS

DRAWING
WS-4
SHEET
4 OF 10

© 2025 CAMPANILE & ASSOCIATES, INC. ALL RIGHTS RESERVED. THIS DOCUMENT MAY NOT BE REPRODUCED IN ANY FORM WITHOUT EXPRESS WRITTEN PERMISSION.